| SIZE | CODE | NUMBER | REV. |
|---|---|---|---|
| B | CS | M360-0-1 | B |

THIS SCHEMATIC IS FURNISHED ONLY FOR TEST AND MAINTENANCE PURPOSES. THE CIRCUITS ARE PROPRIETARY IN NATURE AND SHOULD BE TREATED ACCORDINGLY.
COPYRIGHT 1967 BY DIGITAL EQUIPMENT CORPORATION

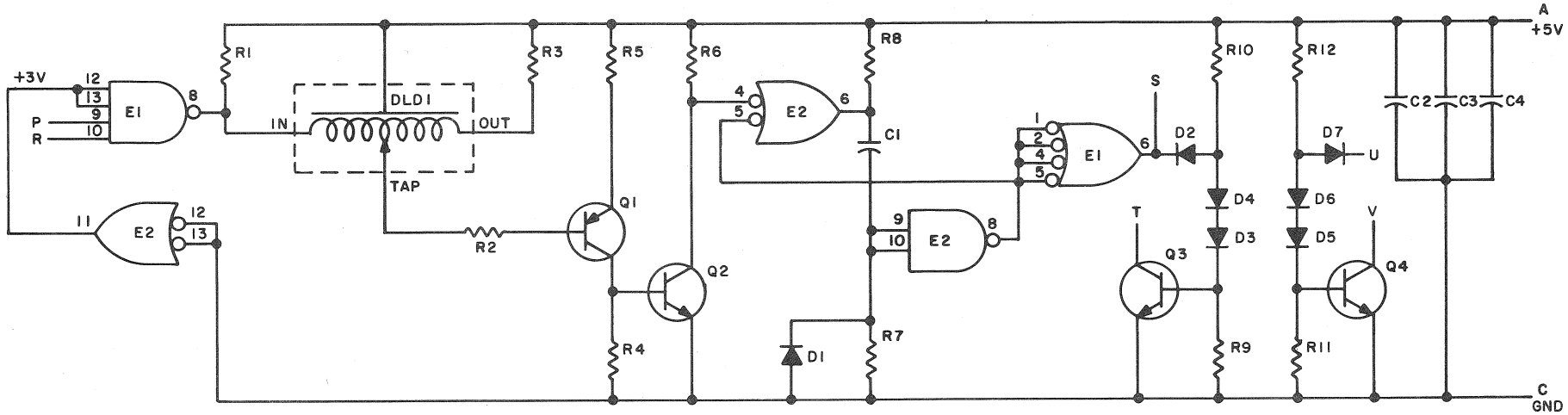


NOTES:
PIN 7 ON EACH IC = GND
PIN 14 ON EACH IC = +5V

| REFERENCE DESIGNATION | DESCRIPTION | PART NO. |
|---|---|---|
| DLD1 | DELAY LINE 500 | 1602167 |
| E2 | INTEGRATED CKT. DEC7400N | 1905575 |
| E1 | INTEGRATED CKT. DEC7440N | 1905579 |
| Q1 | TRANSISTOR DEC6534B | 1503409-01 |
| Q2, Q3, Q4 | TRANSISTOR DEC3009B-S | 1503100 |
| R10, R12 | RES. 1.5K 1/4W 5% CC | 1300391 |
| R9, R11 | RES. 3K 1/4W 5% CC | 1300432 |
| R7 | RES. 220 1/4W 5% CC | 1300271 |
| R4, R5, R6 | RES. 750 1/4W 5% CC | 1301401 |
| R1, R2, R3, R8 | RES. 470 1/4W 5% CC | 1300316 |
| D1-D7 | DIODE D664 | 1100114 |
| C2, C3, C4 | CAP. .01 MFD 100V 20% DISC | 1001610 |
| C1 | CAP. 330MMF 100V 5% D.M. | 1000023 |
| | PARTS LIST | A-PL-M360-0-0 |

PARTS LIST

TRANSISTOR & DIODE CONVERSION CHART

| DEC | EIA | DEC | EIA |
|---|---|---|---|
| DEC3009B | 2N3009 | | |
| DEC6534B | MPS6534 | | |
| D664 | IN3606 | | |

| REVISIONS | | | |
|---|---|---|---|
| CHK | CHG NO. | REV. | |
| | 6978 | A | |
| | 7058 | B | |
| | 00001 | | |

| | | |
|---|---|---|
| DRN. | M. Waller | DATE 3-31-67 |
| CHK'D | | DATE 5-5-67 |
| ENG. | | DATE 5/15/67 |
| PROD. | | DATE |

digital EQUIPMENT CORPORATION
MAYNARD, MASSACHUSETTS

TITLE VARIABLE DELAY M360

| SIZE | CODE | NUMBER | REV. |
|---|---|---|---|
| B | CS | M360-0-1 | B |

PRINTED CIRCUIT REV. A B

DIST. 314 434 435 2

4 PINK

DEC FORM NO.
DRB 102